ERA fumè

LED **24V - 11W/m**

IT **Lampada senza interruttore** - Profilo in alluminio ossidato per installazione ad incasso, schermo in policarbonato fumè.

EN **Lamp without switch** - Oxidized aluminium profile for flush mounting, fumè (dark grey) polycarbonate screen.

DE **Leuchte ohne Schalter** - Einbauprofil aus eloxiertem Aluminium, Abdeckung aus Polykarbonat fumè (Antrazit).

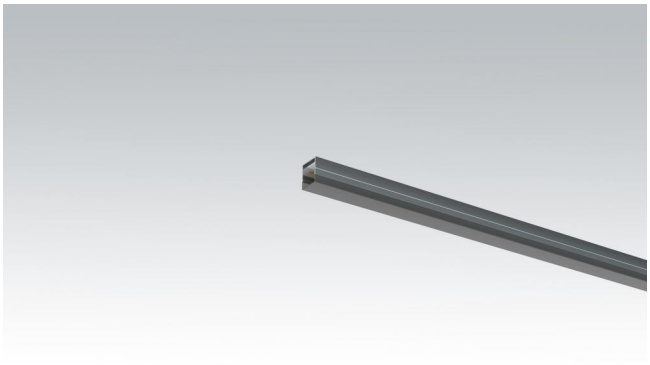

114-122 lm/W PHOTOBIOLOGICAL CLASS 0 CRI>80

CE IP40 III ENEC 05 Pending ETL Pending

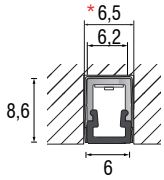

6010001

Clip di fissaggio (incluso)
Fixing clip (included)
Befestigungsclip (inbegriffen)

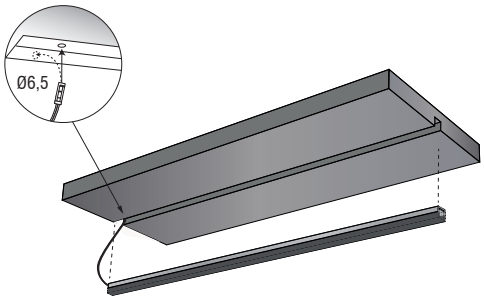

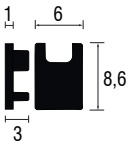

601T002F

Tappi (opzionale)
Terminals (optional)
Verschlüsse (optional)

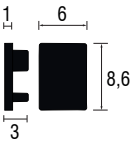

601T002CF

Tappi chiusi (opzionale)
Closed terminals (optional)
Verschlüsse (optional)

L	3000 K		4000 K	
min - max	Codice - Part no. - Artikel-Nr.	EEC	Codice - Part no. - Artikel-Nr.	EEC
300 - 3000	101101F	A+	101102F	A+

Esclusivamente su misura - Custom measures only - Nur maßgeschneiderte

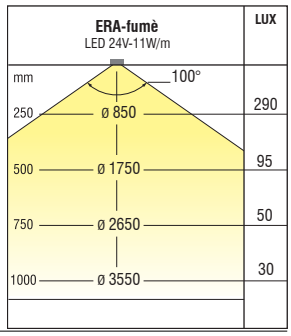

Dimensioni in millimetri (mm) / Dimensions in Millimiters (mm) / Dimensionen in Millimetern (mm)
Alimentatore non incluso / Driver not included / LED-Konverter nicht inbegriffen

Connettore
Connector / Verbindungsstecker